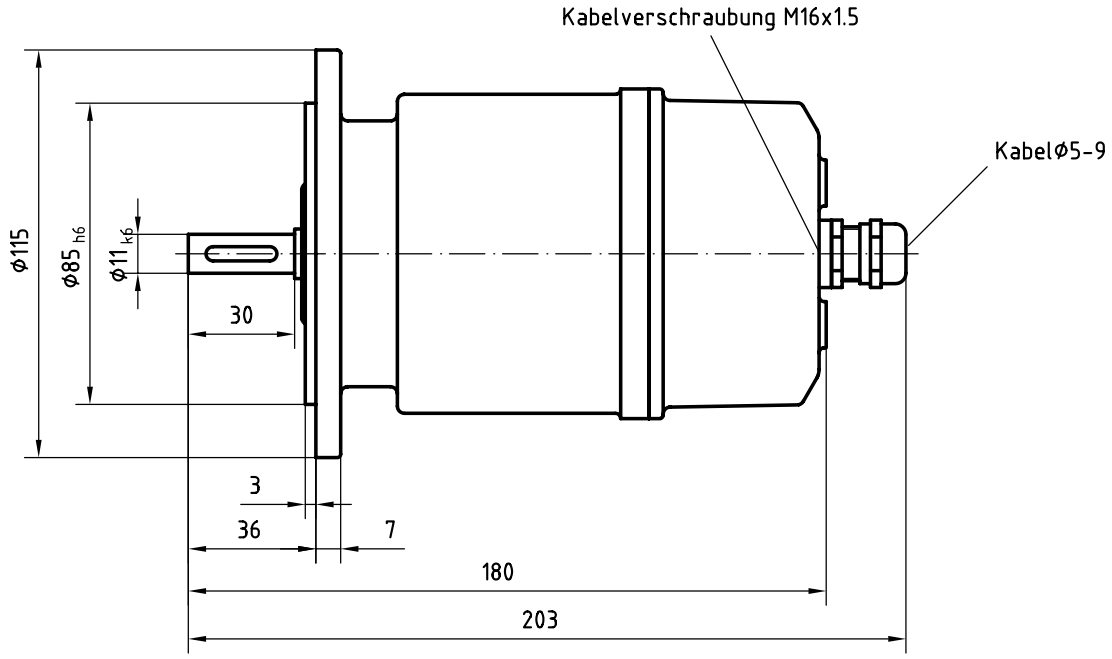

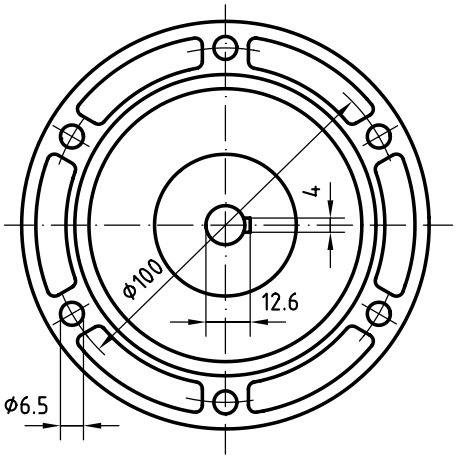

RAL 7021 anthrazit

Bauform B10